solis

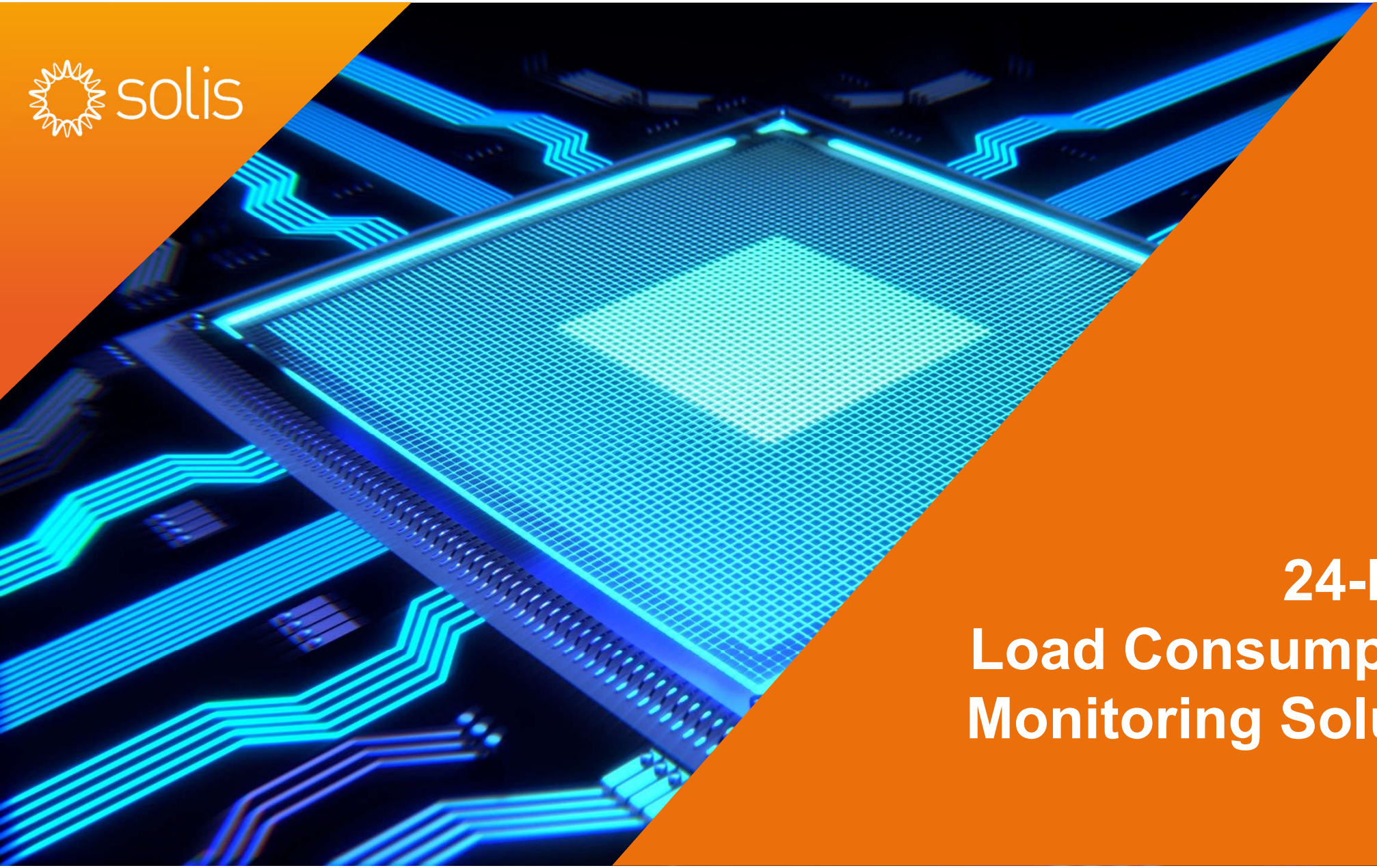

24-hour Load Consumption Monitoring Solution

CONTENTS

01 Function

02 Accessory

03 Note

04 Schedule

solis

Function

Monitor the load consumption for the whole day as long as the AC is available

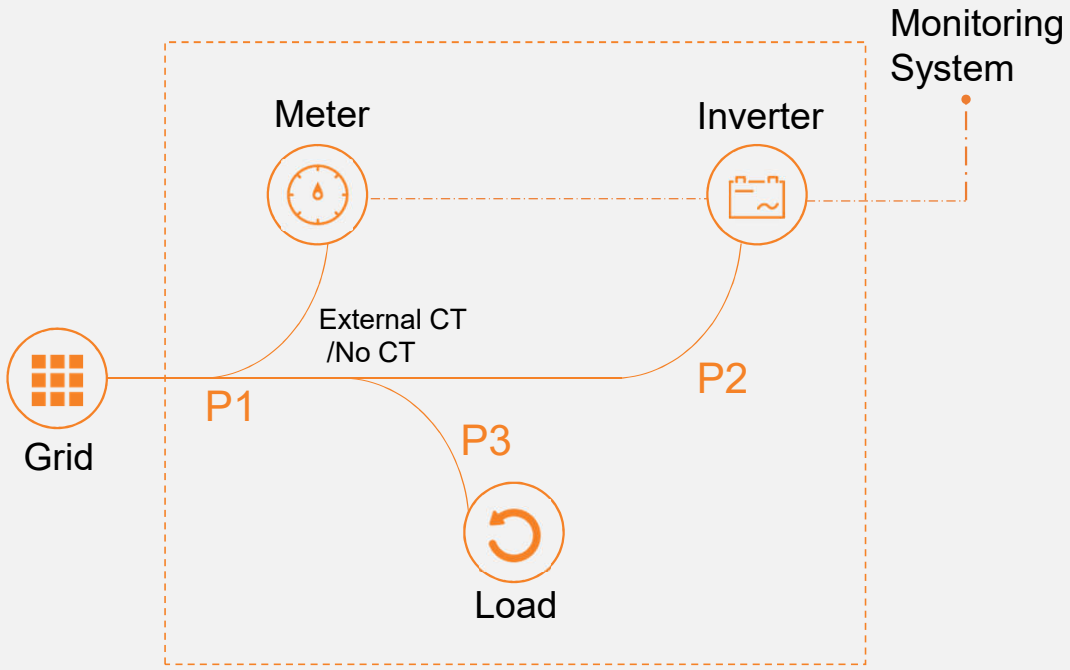

“Meter In Grid” Configuration is required

During the day

- Meter is able to monitor the power flow at the grid connection point P1
- Inverter has generation of P2
- Both data will be uploaded to the monitoring system through the inverter datalogger. Calculation is done by the monitoring system, load consumption power P3 is obtained. Furthermore, load consumption energy is obtained.

At night

- With the 24hour consumption monitoring function enabled(AC relay keeps closed), part of the internal circuit of the inverter (HMI board) is energized with the monitoring function still in active. Data can still be uploaded to the monitoring system.
- All day consumption monitoring is achieved

Function

Monitor the load consumption for the whole day as long as the AC is available

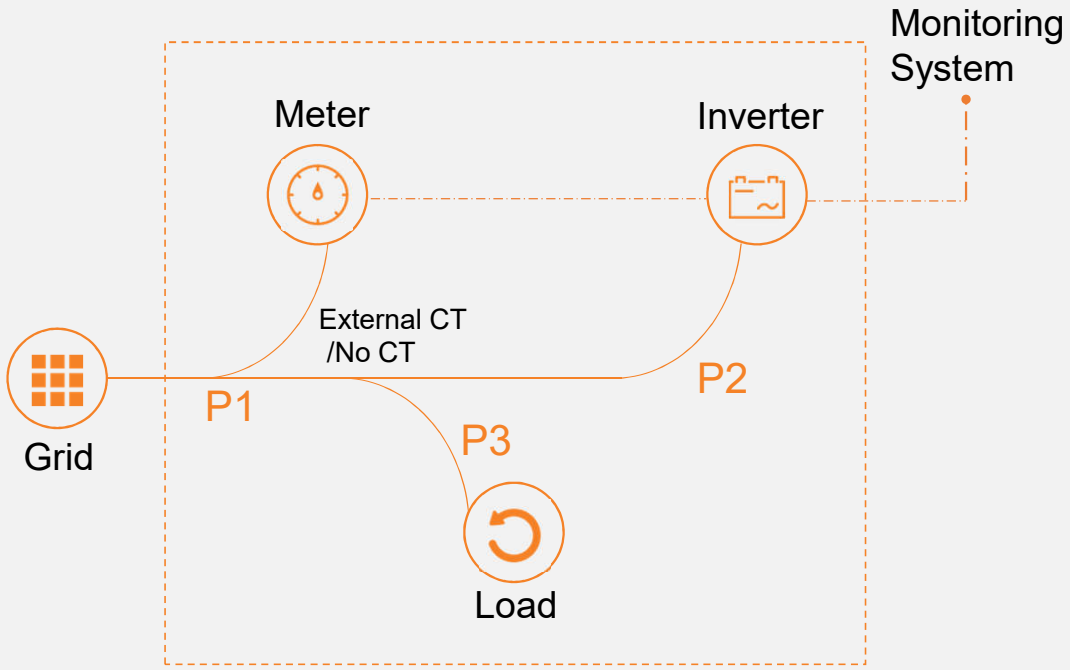

Following series of inverters are going to have this function:

- Solis-mini-(700-3600)W-4G
- Solis-1P(2.5-6)K-4G
- Solis-1P(7-8)K-5G
- Solis-3P(3-20)K-4G

Function | How to enable the function?

Step 1: Meter connected

- Refer to the next slides to connect the smart meter.
- Meter is located at the grid connection point (Meter in Grid).
- Communication cable between the meter and the inverter is connected.

Step 2: Turn on the function through LCD

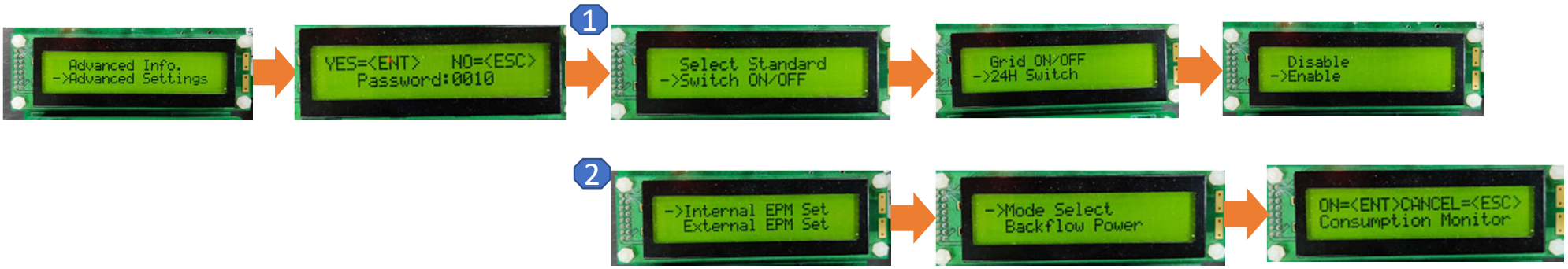

1. Advanced Setting -> Password:0010 -> Switch ON/OFF -> 24H Switch -> Enable
2. Advanced Setting -> Password:0010 -> Internal EPM Set-> Mode Select-> Consumption Monitor

Step 3: Get the inverter on the monitoring system

WiFi LAN GPRS

Function | How to enable the function?

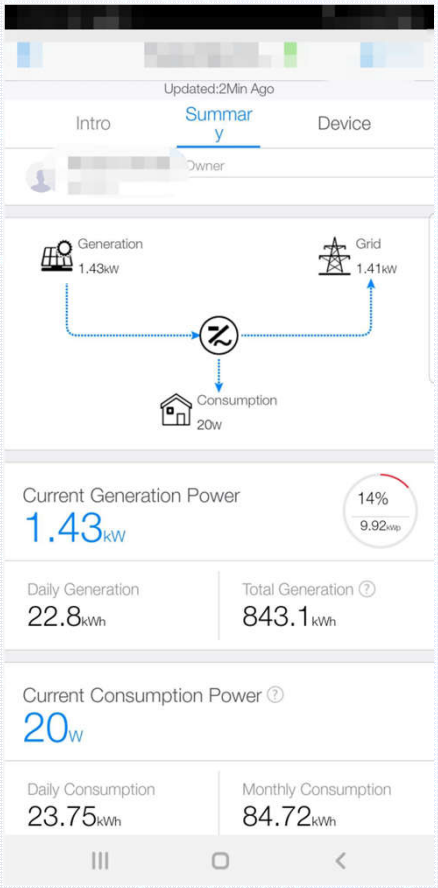

APP

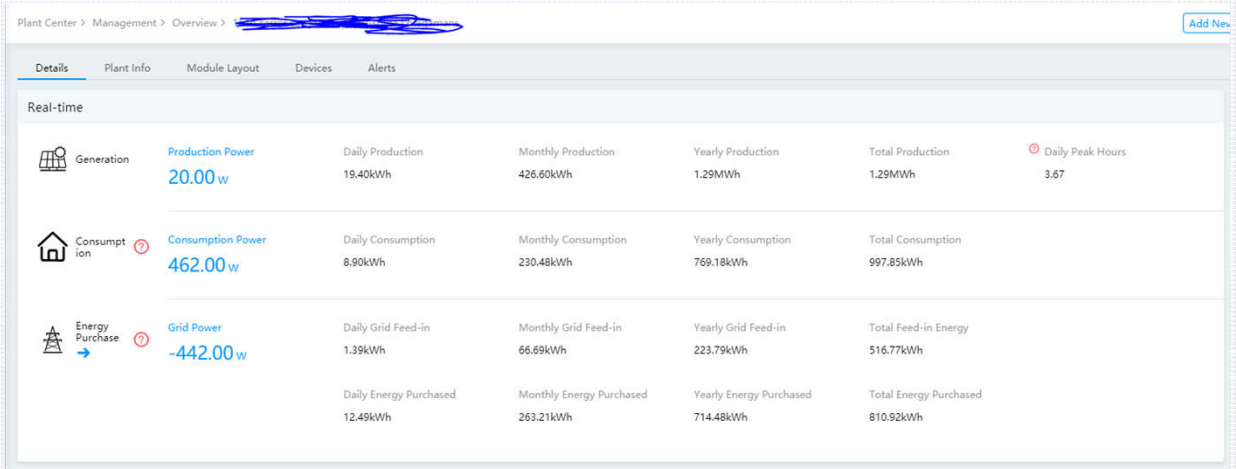

Web

Accessory

Single Phase Meter – Without CT (Direct Insert)

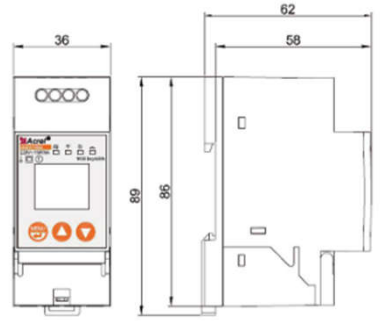

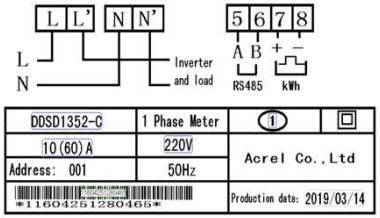

Model:

Solis-mini-(700-3600)W-4G

Solis-1P(2.5-6)K-4G

Solis-1P(7-8)K-5G

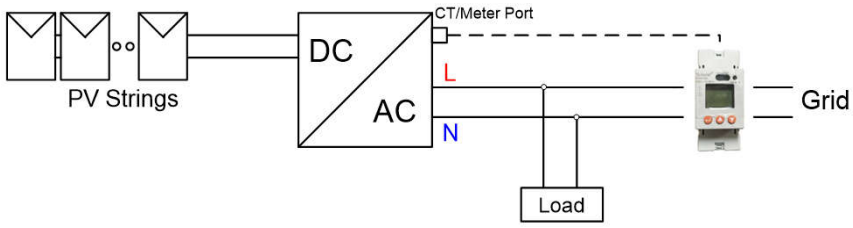

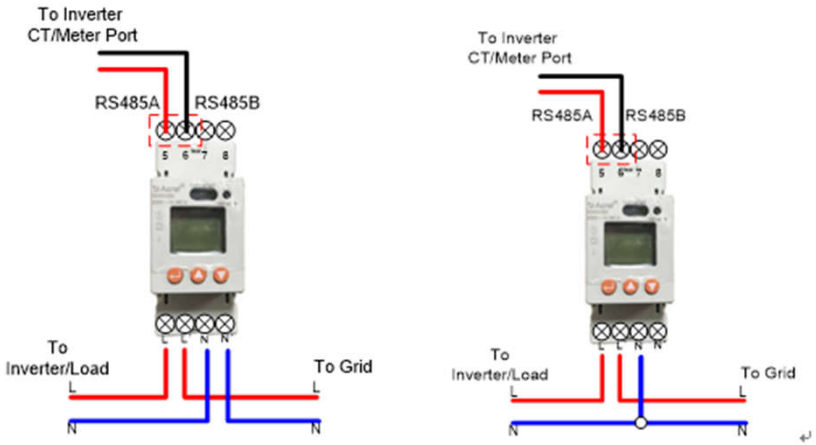

Figure 7. Single Phase Meter System Diagram

(Both connections are Good)

Acrel DDSD1352

10M COM cable included

Accessory

Single Phase Meter – With External CT

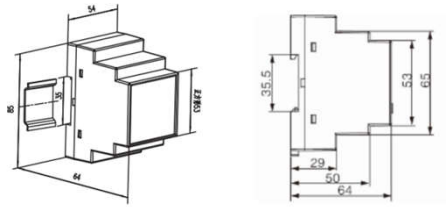

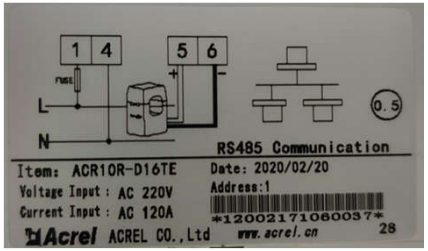

Model:

Solis-mini-(700-3600)W-4G

Solis-1P(2.5-6)K-4G

Solis-1P(7-8)K-5G

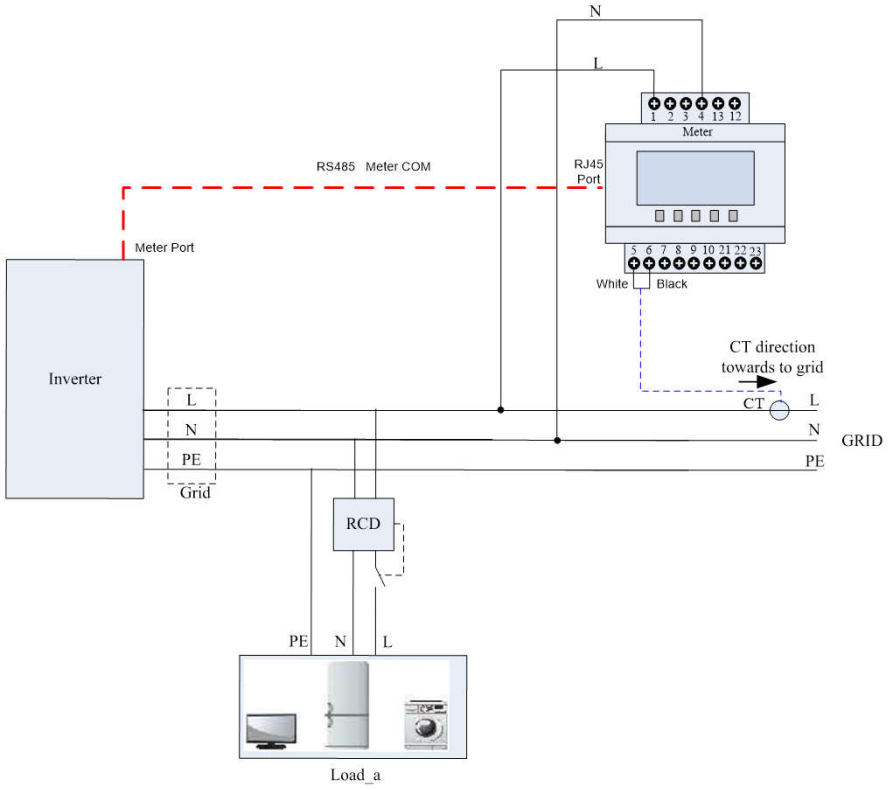

Acrel ACR10R-D16TE

10M COM cable included*120A/40mA CT included(Hole Diameter 16mm)

Accessory

Three Phase Meter – Without CT (Direct Insert)

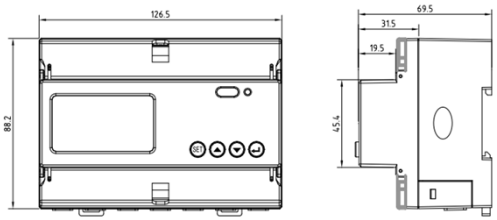

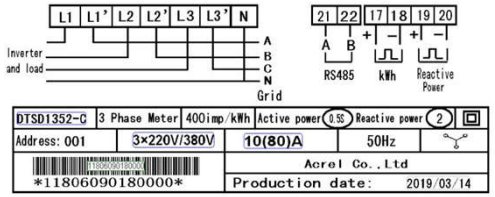

Model:
Solis-3P(3-20)K-4G

* Solis-(25-50)K-5G also compatible, but only EPM function, not 24hour consumption monitoring

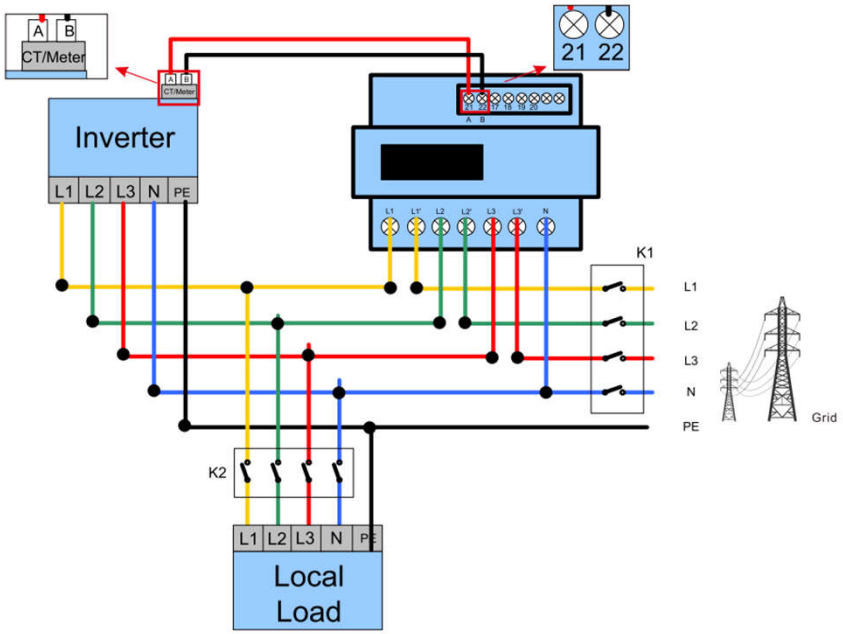

Acrel DTSD1352 3*10(80)A

10M COM cable included

Accessory

Three Phase Meter – With External CT

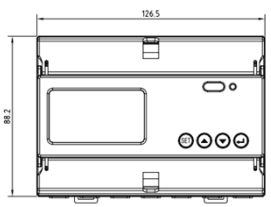

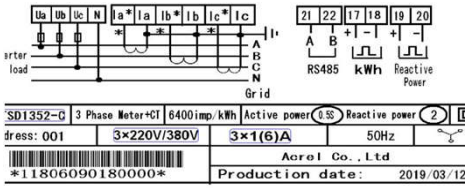

Model:
Solis-3P(3-20)K-4G

* Solis-(25-50)K-5G also compatible, but only EPM function, not 24hour consumption monitoring

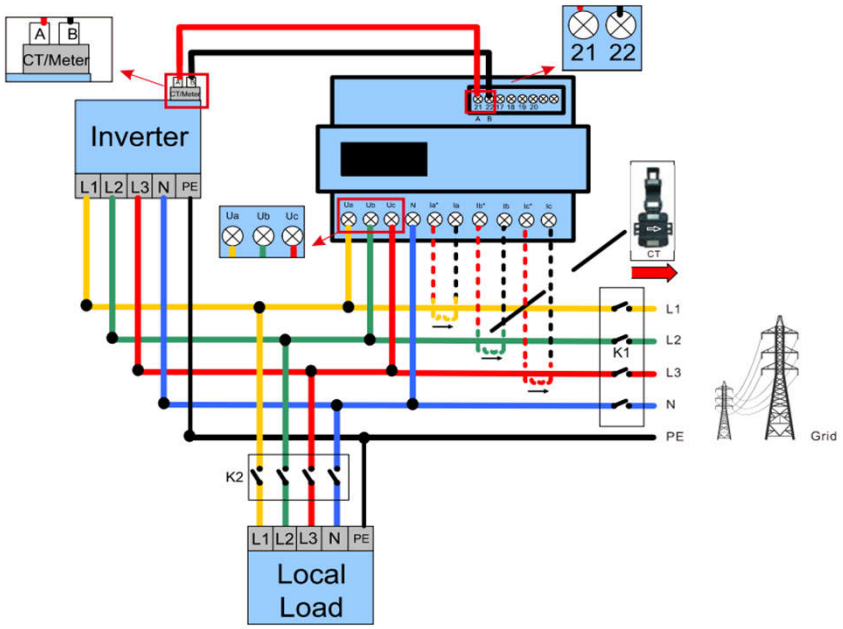

Acrel DTSD1352 3*1(6)A

10M COM cable included, 3 sets of 150A/5A CT included

150A:5A

Note

- “Meter in Grid” connection is required.
- “24hour consumption monitoring” and the “Internal EPM Function” can be both turned ON or individually turned ON.
- Meter is an accessory which needs to be ordered separately.
- All the meters are preset. No need onsite modifications on the meter, simple plug and play.
- Unauthorized setting change on the meter is forbidden. Avoid difficulties on troubleshooting.
- Hybrid Inverters don’t have the settings for this function, but they have a battery connected which can inherently achieve 24hour consumption monitoring.
- EPM1-5G/EPM3-5G/EPM3-5G-Plus is AC powered and the data uploading is not depending on the inverters. They can help the system achieve 24hour consumption monitoring as well.

Schedule

Model	Function Release Date	Firmware Upgrade
Solis-mini-(700-3600)W-4G	1st of July	Both HMI and DSP need upgrade. HMI 30+, can do remote upgrade
Solis-1P(2.5-6)K-4G		
Solis-1P(7-8)K-5G		
Solis-3P(3-20)K-4G	18th of June	Both HMI and DSP need upgrade. Can do remote upgrade

THANKS

Ningbo Ginlong Technologies Co.,Ltd

NO.57 Jintong Road, Xiangshan,Ningbo, Zhejiang, China

Ningbo Ginlong Technologies Co.,Ltd
www.ginlong.com

Solis Solis Ginlong Solis YouTube Ginlong Solis